VIBRA SCREW INC.
The most trusted name in dry solids processing.
755 Union Boulevard Totowa, New Jersey 07512
Phone: 973-256-7410 Fax: 973-256-2114 www.VibraScrew.com

VERSIFEEDER

A Breakthrough in Volumetric Feeder Design

VersiFeeder

Modular Design

The Vibra Screw VersiFeeder is the first volumetric feeder with modular design, enabling a single unit to adapt to the broadest range of feeding applications.

- **A Standard Feeder**, with static hopper, trough and feed screw for free-flowing materials.
- **An Agitator Conditioner Feeder**, with secondary trough conditioning screw for semi-free-flowing materials.
- **A Vibrated Feeder,** using Vibra Screw's controlled vibration design for non-free-flowing materials.

The VersiFeeder permits selection of the most economical design required for a specific application, with the unequalled ability to upgrade the design as materials or characteristics change.
You'll always achieve accuracies of ± 1-2%, whether with pellets, flakes, powders or fibers.

Easy Clean, Tool-less, Rear Screw Removal

The Vibra Screw Versifeeder offers rear screw removal, permitting cleaning and screw size changes away from the process side. Disassembly is accomplished without tools and in a matter of minutes. All driveline components, gaskets and seals maintain their alignment and integrity during disassembly and reassembly. The screw can also be removed from the front if desired.

Standard or Sanitary from 0.14 to 600 cuft/hr

The Versifeeder is available in screw sizes from 1" to 6" and sanitary construction in all sizes. Whether you feed chemicals, foods or pharmaceuticals, Versifeeder's wide range of models and options meet the need.

Easy Clean, Tool-less, Rear Screw Removal

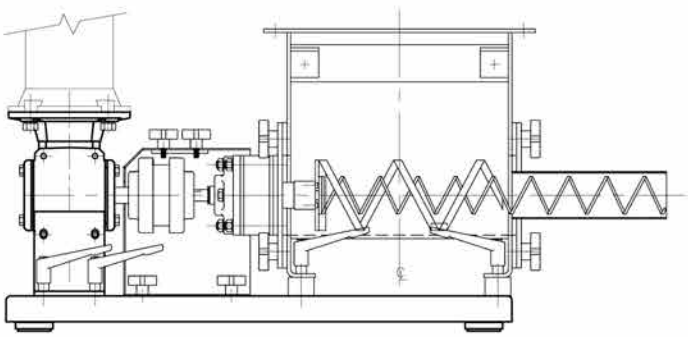

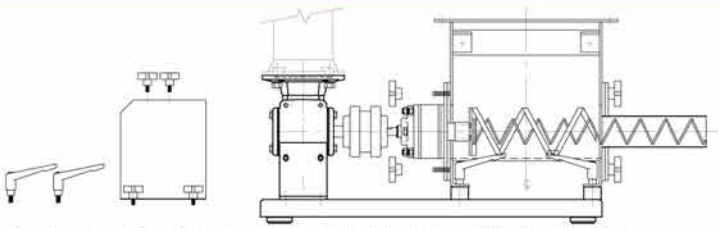

REMOVE REDUCER BRACKET HANDLES AND HAND KNOBS ON REAR OF TROUGH; REMOVE DRIVE GUARD.

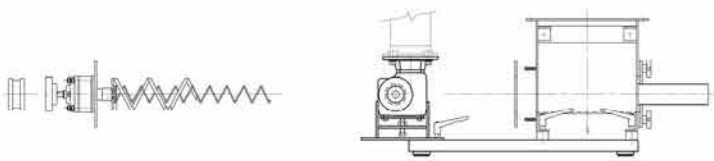

LOOSEN THE REMAINING REDUCER BRACKET HANDLE BUT DO NOT REMOVE. SLIDE THE REDUCER BRACKET BACK AND ROTATE 90 DEGREES. SLIDE DRIVE ASSEMBLY AND SCREW OUT THROUGH REAR OF TROUGH.

IF DESIRED REMOVE THE FEED TUBE AND GASKET FROM FRONT OF TROUGH.

THE VIBRA SCREW GUARANTEE

If your Vibra Screw equipment doesn't perform in the service for which it was sold, we'll refund your money. Ask any other equipment manufacturer to put that in writing.

No time limits. No conditions.

VERSIFEEDER

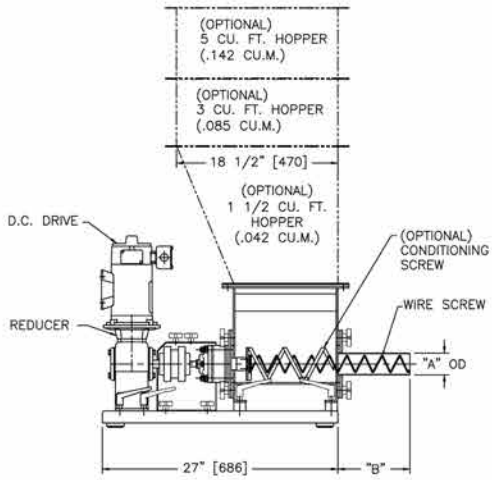

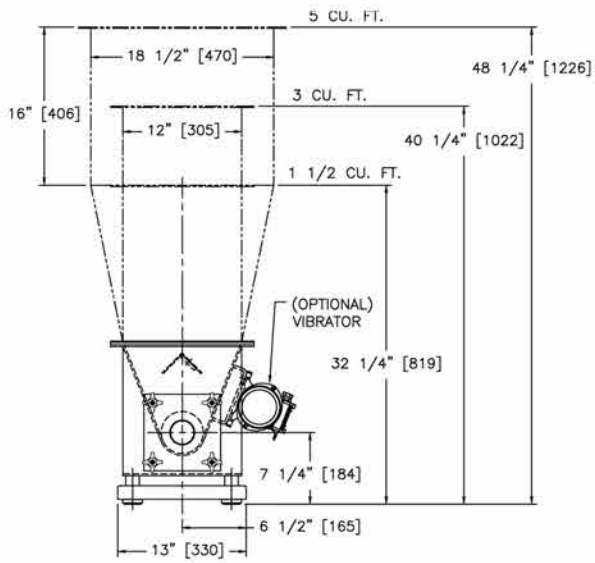

Six screw sizes in the standard VersiFeeder provide accurate feeding at up to 600 cu ft/hr. It handles a broad range of materials and may be fitted with an intergral, free-flow hopper, as shown, or an optional trough cover for use directly beneath a bulk storage bin.

Optional coating of contact and non-contact parts broadens its application with corrosive and abrasive materials.

	IN INCHES (MM)		MAXIMUM FEED RATES (NOTE: TYPICAL TURNDOWN IS 20 TO 1)	
SCREW DIA.	A	B	CU.FT./HR.	CU.M/HR.
1 (25)	1 1/2 (38)	8 1/4 (210)	2.8	.1
1 1/2 (38)	2 (51)	8 1/4 (210)	8.8	.2
2 (51)	2 1/2 (63)	8 1/4 (210)	23.0	.6
3 (76)	3 1/2 (89)	14 (356)	74.0	2.0
4 (102)	4 1/2 (114)	14 (356)	200.0	6.0
6 (152)	6 5/8 (168)	18 (457)	600.0	17.0

Standard VersiFeeder Specifications

CONTACT MATERIALS
a. Carbon steel
b. 304 stainless steel
c. 316 stainless steel
d. Special Alloys

EXTERNAL MATERIALS
Carbon Steel

COATINGS
Standard external: machinery enamel

Optional external:
a. Epoxy paints
b. Corrosion resistant paints
c. Customer-specified paints, colors
Standard Internal: machinery enamel for carbon steel; stainless and other alloys, uncoated
Optional internal:
a. Epoxy paints
b. Teflon coating
c. Customer specified

DRIVES
Standard:
a. SCR solid state DC drives, potentiometer controlled, 115-240/1/60, available with modification to accept external signal; 1-5 mA, 4-20 mA, 10-50 mA, 0-6 v.
b. Inverter variable AC drive
c. AC constant speed

ENCLOSURES
Standard: totally enclosed, fan-cooled
Optional:
a. Explosion-proof, Class I, Group D, Explosion-proof, Class II, Group F & G
b. Chemical type, severe duty
c. Customer specified

FOOD GRADE APPLICATIONS
Standard:
a. All internal seams continuously welded
b. All welds ground smooth
c. All internal surfaces polished, #4 finish
d. Food grade gaskets and seals
e. Material contact zone covers & frames equipped with quick disconnect fasteners for ease of cleaning

OPTIONAL FEATURES/EQUIPMENT:
- Vibrator on feed trough.
- Conditioning screw in feed trough (4" conditioning screw for 1 through 2 inch sizes; 6" conditioning screw for 3 and 4 inch sizes).
- Hopper cover with inlet opening and vent.

OVERALL DIMENSIONS:
See diagram above.

© 2014 Vibra Screw, Inc.